7. Rear Disc Brake Assembly

A: REMOVAL

1. 14-INCH TYPE

CAUTION:
Do not allow brake fluid to come in contact with vehicle body. If it does, wash off with water immediately and wipe away completely.
1) Set the vehicle on a lift.
2) Loosen the wheel nuts.
3) Lift up the vehicle, and remove the wheels.
4) Disconnect the brake hose from caliper body assembly.
5) Remove the bolt securing the lock pin to caliper body.

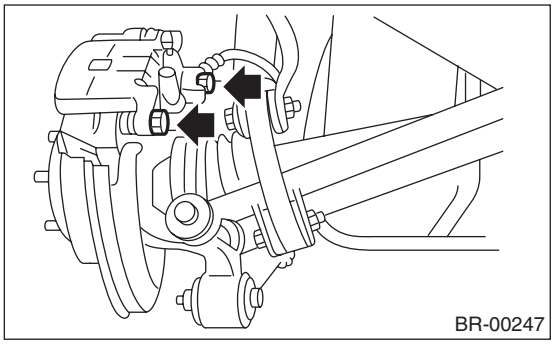

6) Raise the caliper body, and then move it toward vehicle center to separate it from the support.
7) Remove the support from housing.

NOTE:
Remove the support only when replacing the rotor or support. It need not be removed when servicing the caliper body assembly.
8) Remove mud and foreign matter from the caliper body assembly and the support.

CAUTION:
Be careful not to allow foreign matter to enter the brake hose connector.

2. 15-INCH TYPE

CAUTION:
Do not allow brake fluid to come in contact with vehicle body. If it does, wash off with water immediately and wipe away completely.
1) Set the vehicle on a lift.
2) Loosen the wheel nuts.
3) Lift up the vehicle, and remove the wheels.
4) Remove the pad from the caliper body. <Ref. to BR-29, REMOVAL, Rear Brake Pad.>
5) Disconnect the brake hose from caliper body assembly.
6) Remove the caliper body from the housing.

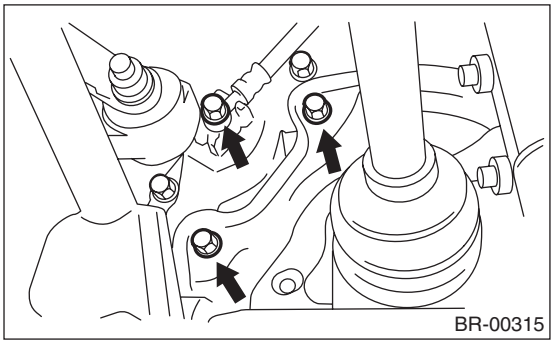

7) Remove mud and foreign objects from the caliper body assembly.

CAUTION:
Be careful not to allow foreign matter to enter the brake hose connector.

3. 17-INCH TYPE

CAUTION:
Do not allow brake fluid to come in contact with vehicle body. If it does, wash off with water immediately and wipe away completely.
1) Set the vehicle on a lift.
2) Loosen the wheel nuts.
3) Lift up the vehicle, and remove the wheels.
4) Remove the brake pad from the caliper body. <Ref. to BR-30, 17-INCH TYPE, REMOVAL, Rear Brake Pad.>
5) Disconnect the brake hose from the caliper body.
6) Remove the caliper body from the housing.

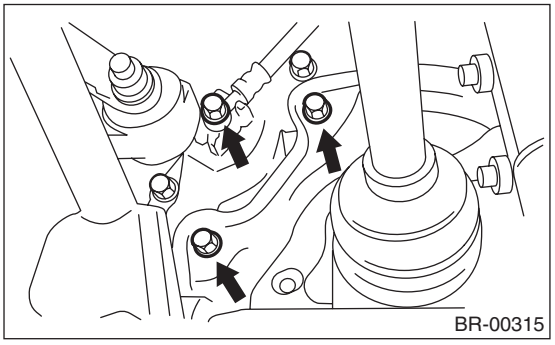

7) Remove mud and foreign objects from the caliper body.

CAUTION:
Be careful not to allow foreign matter to enter the brake hose connector.

B: INSTALLATION

1. 14-INCH TYPE

1) Apply a thin coat of Molykote M7439 (Part No. 003602001) to the support.

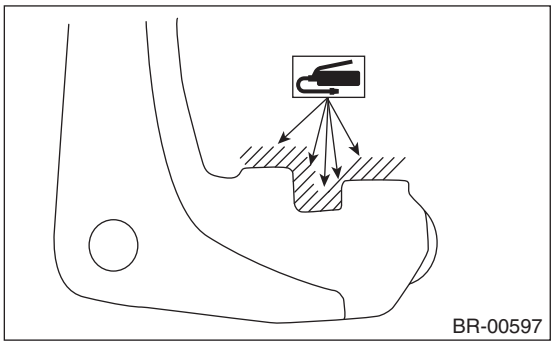

2) Install the support to the housing.

Tightening torque:
53 N·m (5.4 kgf-m, 39.1 ft-lb)

3) Apply a thin coat of Molykote M7439 (Part No. 003602001) to the contact surface between the pad and pad clip.

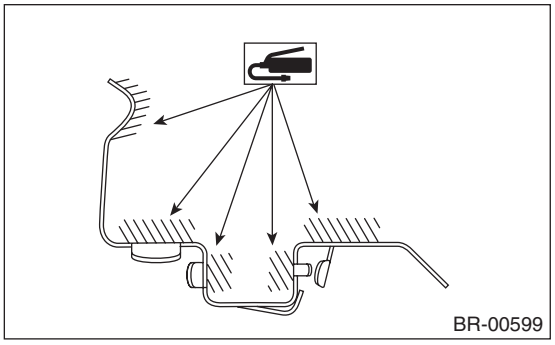

4) Apply a thin coat of Molykote AS-880N (Part No. K0777YA010) to the contact surface between the pad and shim.

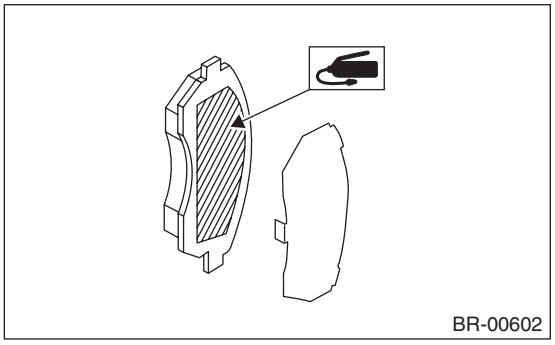

5) Install the pad to support.
6) Install the caliper body to the support.

Tightening torque:
37 N·m (3.8 kgf-m, 27.5 ft-lb)

7) Connect the brake hose using a new brake hose gasket.

Tightening torque:
18 N·m (1.8 kgf-m, 13.0 ft-lb)

8) Bleed air from the brake system.

2. 15-INCH TYPE

1) Install the caliper body to the housing.

Tightening torque:
53 N·m (5.4 kgf-m, 39.1 ft-lb)

2) Apply a thin coat of Molykote AS-880N (Part No. K0777YA010) to both surfaces of the pad inner shim, and Molykote M7439 (Part No. 003602001) to the sides of pad.

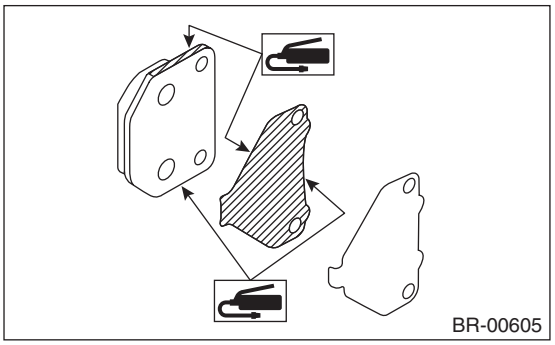

3) Install the pad to the caliper body.
4) Connect the brake hose using a new brake hose gasket.

Tightening torque:
18 N·m (1.8 kgf-m, 13.0 ft-lb)

5) Bleed air from the brake system.

3. 17-INCH TYPE

1) Install the caliper body to the housing.

Tightening torque:
65 N·m (6.6 kgf-m, 47.9 ft-lb)

2) Apply a thin coat of Molykote AS-880N (Part No. K0777YA010) to both surfaces of the pad inner shim, and Molykote M7439 (Part No. 003602001) to the sides of pad.

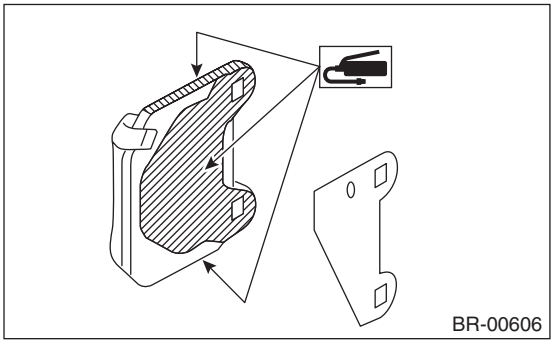

3) Install the pad to the caliper body.
4) Connect the brake hose using a new brake hose gasket.

Tightening torque:
18 N·m (1.8 kgf-m, 13.0 ft-lb)

5) Bleed air from the brake system.

C: DISASSEMBLY

1. 14-INCH TYPE

1) Remove the boot ring.

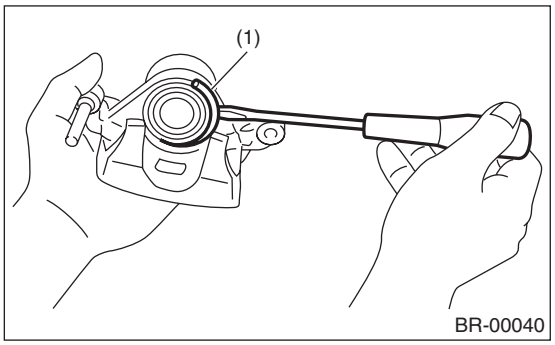

(1) Boot ring

2) Remove the piston boot.

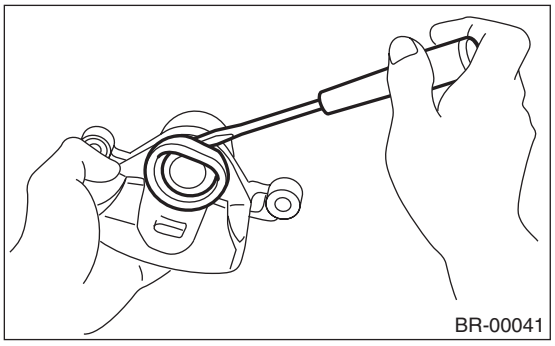

3) Place a wooden block in the caliper body as shown in the figure to prevent the piston from jumping out and being damaged.
4) Gradually apply compressed air via the brake hose installation hole to push the piston out.

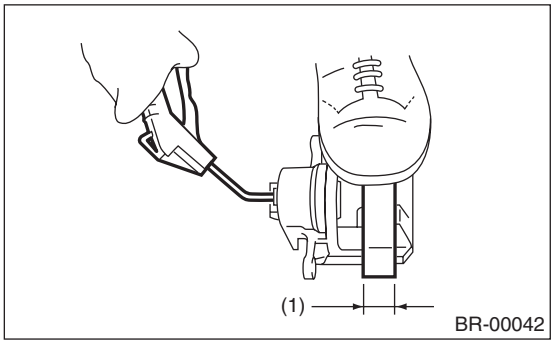

(1) Place a wooden block of 30 mm (1.18 in) width.

5) Remove the piston seal from caliper body cylinder.

CAUTION:
Do not damage the cylinder and piston seal groove.

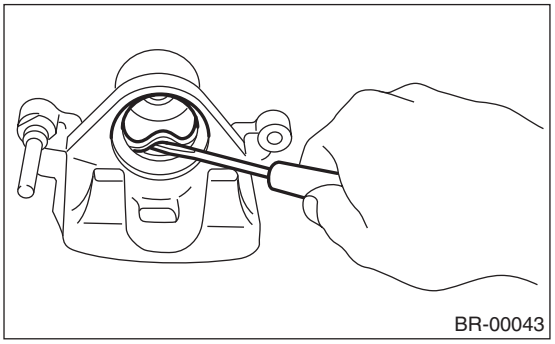

6) Remove the lock pin sleeve and boot from caliper body.
7) Remove the guide pin boot.

2. 15-INCH TYPE

1) Remove the boot ring.

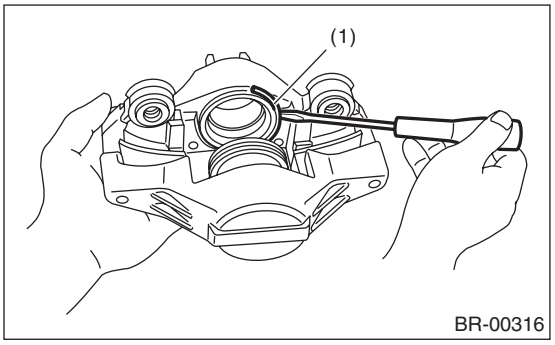

(1) Boot ring

2) Remove the piston boot.

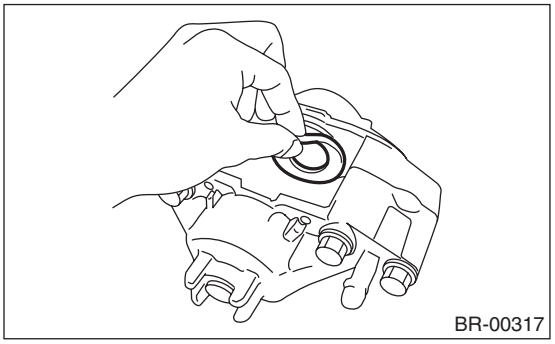

3) Place a wooden block in the caliper body as shown in the figure to prevent the piston from jumping out and being damaged.

4) Gradually apply compressed air via the brake hose installation hole to push the piston out.

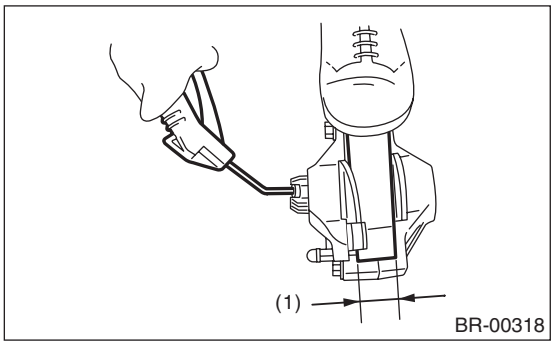

(1) Place a wooden block of 30 mm (1.18 in) width.

5) Remove the piston seal from caliper body cylinder.

CAUTION:
Do not damage the cylinder and piston seal groove.

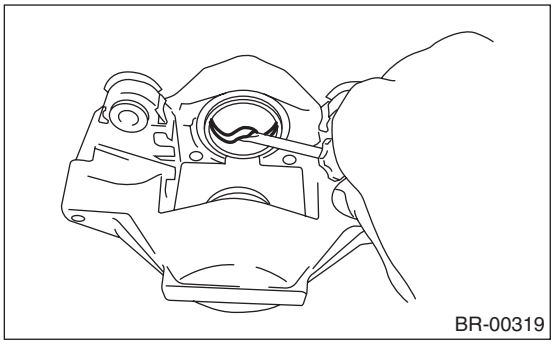

3. 17-INCH TYPE

1) Remove the piston boot from each piston end.

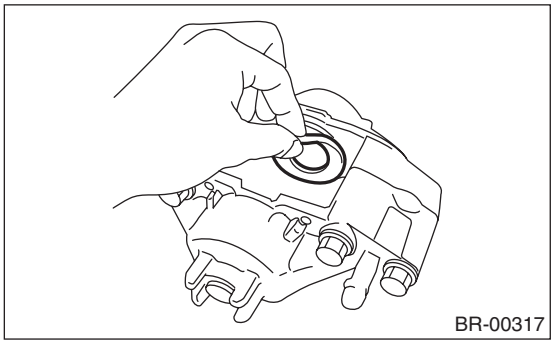

2) Place a wooden block in the caliper body as shown in the figure to prevent the piston from jumping out and being damaged.

3) Gradually apply compressed air via the brake hose installation hole to push the piston out.

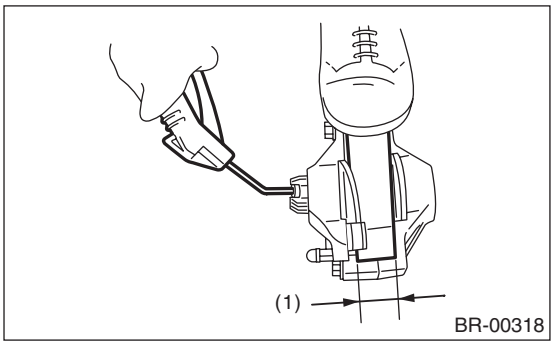

(1) Place a wooden block of 20 mm (0.79 in) width.

4) Remove the piston seal from caliper body cylinder.

CAUTION:
Do not damage the cylinder and piston seal groove.

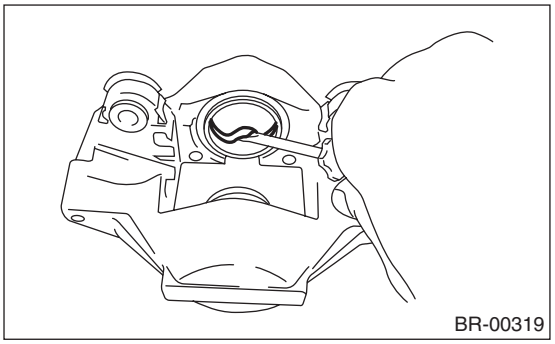

D: ASSEMBLY

1. 14-INCH TYPE

1) Clean the inside of the caliper body using brake fluid.
2) Apply a coat of brake fluid to piston seal and install piston seal in the groove on caliper body.
3) Apply a coat of brake fluid to the inner surface of cylinder and the entire outer surface of the piston.
4) Insert the piston into cylinder.

CAUTION:
Do not force the piston into cylinder.

5) Apply a coat of specified grease to the boot and fit to the groove on the ends of the cylinder and piston.

Grease:
NIGLUBE RX-2 (Part No. K0779GA102)

6) Attach the piston boot to the caliper body, and attach the boot ring.

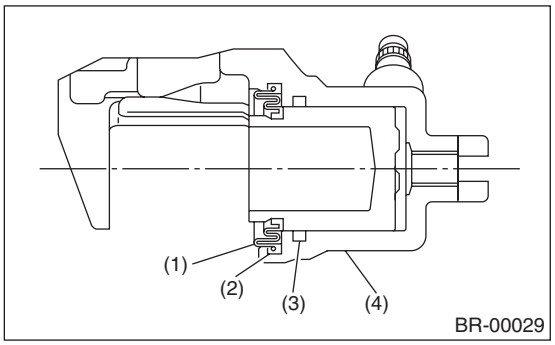

(1) Piston boot
(2) Boot ring
(3) Piston seal
(4) Caliper body

7) Apply a coat of specified grease to the guide pin, outer surface, sleeve outer surface, cylinder inner surface, and boot grooves.

Grease:
NIGLUBE RX-2 (Part No. K0779GA102)

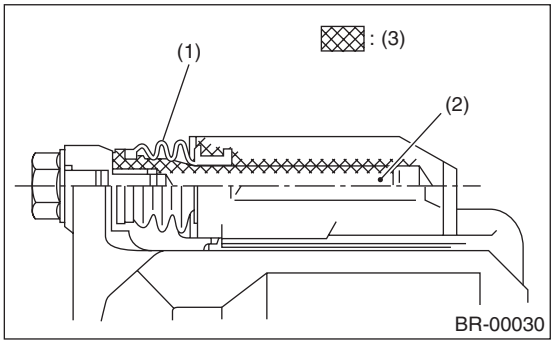

(1) Pin boot
(2) Lock pin or guide pin
(3) Grease applied area

8) Insert the guide pin boot to the support.
9) Install the lock pin boot to the support, and then insert the lock pin sleeve into the specified position.

2. 15-INCH TYPE

1) Clean the inside of the caliper body using brake fluid.
2) Apply a coat of brake fluid to piston seal and install piston seal in the groove on caliper body.
3) Apply a coat of brake fluid to the inner surface of cylinder and the entire outer surface of the piston.
4) Apply a coat of specified grease to the boot and fit to the groove on the piston.

Grease:
NIGLUBE RX-2 (Part No. K0779GA102)

5) Insert the piston into cylinder.

CAUTION:
Do not force the piston into cylinder.

6) Attach the piston boot to the caliper body, and attach the boot ring.

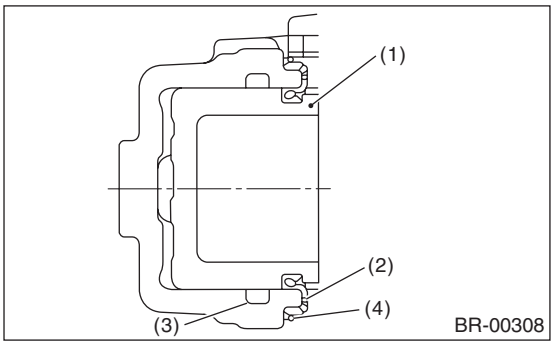

(1) Piston
(2) Piston boot
(3) Piston seal
(4) Boot ring

3. 17-INCH TYPE

1) Clean the inside of the caliper body using brake fluid.
2) Apply a coat of brake fluid to the piston seal and install the piston seal in the groove of the caliper body.
3) Apply a coat of brake fluid to the inner surface and the entire outer surface of the cylinder.
4) Apply a coat of specified grease to the boot and fit to the groove on the piston.

Grease:
NIGLUBE RX-2 (Part No. K0779GA102)

5) Insert the piston into the cylinder.

CAUTION:
Do not force the piston into cylinder.

6) Position the boot in the grooves on piston and cylinder.

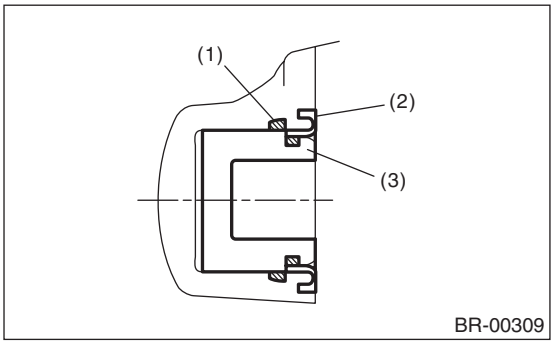

(1) Piston seal
(2) Piston boot
(3) Piston

E: INSPECTION

1) Repair or replace the faulty parts.
2) Check the caliper body and piston for uneven wear, damage or rust.
3) Check the rubber parts for damage or deterioration.